10/100/1000 BASE-T SINGLE PORT SURFACE MOUNT MAGNETICS

- Meets IEEE 802.3ab Standards.
- RoHS Compliant.
- 10/100/1000 Base-T,Surface Mount Type,Open Header .
- Operating temperature range: -40℃ to +85℃.

Electrical Specifications @25°C

Part Number	OCL(uH Min) @100KHz,0.2V With 8mA DC Bias	Turns Ratio (±5%)	Insertion Loss (dB Max)	Return Loss (dB Min)		Cross talk (dB Min)		CMRR (dB Min)	HI-POT (Vrms)
			0.5-100MHz	0.5-40MHz	40.1-100MHz	0.5-40MHz	40.1-100MHz	0.5-100MHz	
G2401CE	350	1CT:1CT	-1.1	-18	-12+20*log(f/80)	-35	-33+20*log(f/50)	-30	1500

MECHANICAL

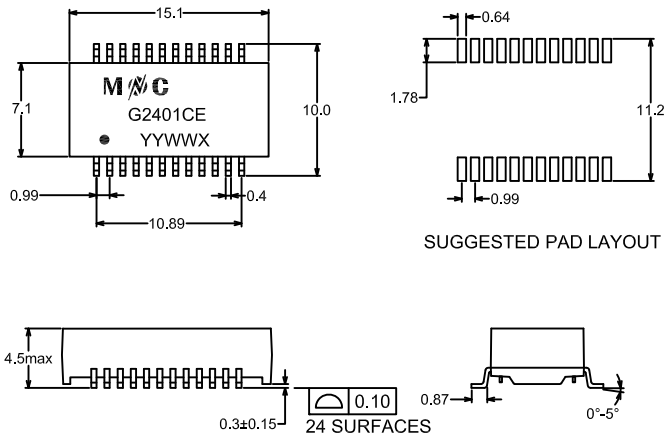

Unless otherwise specified all tolerances are:±0.25 in mm

SCHEMATICS

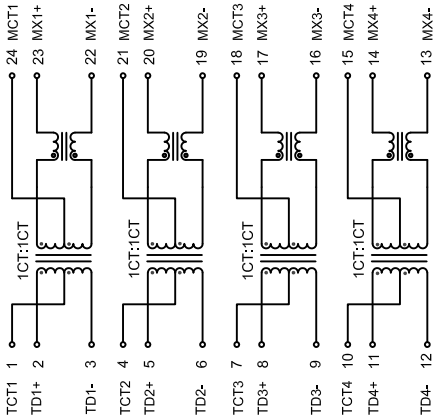

Headquarters +86 769 86921000··Shenzhen R&D +86 755 36899993··USA +1 512 3433613··Korea +82 70 46394572··Taiwan +886 2 26984868··Hongkong +852 21211269

www.mnc-tek.com